JTAG Use in Functional Testers on the Rise

As most industry test professional now agree the era of 'one test method fits all' is well behind us. Even when faced with the most modest diversity of products, trying to formulate a test policy/philosophy is becoming an increasingly tricky balancing act.

What's more as many of the low-cost high volume manufacturing facilities move east to Asia and other low-cost bases then so to do the high-volume, high-cost testers - predominantly In-Circuit Test (ICT). In Europe and North America meanwhile test professionals are adjusting to the role of testing lower volume, yet often high value products, by undertaking more functional style tests using generic functional testers.

Functional testers (FT) are built to stimulate and monitor the function of a system (usually a PCB assembly) by emulating its function using precision test and measurement instruments (typically signal sources, pattern generators, oscilloscope,s counters etc..). However unlike ICT machines the developer of a FT solution requires in-depth knowledge of the PCBA operation if they are to test right to the kernel of the board. This knowledge requires skill and time to acquire which in-turn means high costs. JTAG boundary-scan test technology however can automate the in-depth testing of many digital and mixed-signal designs and can easily be added into functional testers - provided the JTAG solution vendor offers the appropriate driver packages.

How does JTAG/Boundary-scan Work ?

In 1990 an IEEE standard was published that described how to embed test circuitry into digital devices. It appeared at a time when designers and test engineers were concerned by the lack of physical access to circuit nodes caused by the introduction of high-density chip packages and surface mounted devices.

The standard was entitled as the boundary-scan architecture and test access port and described the logic need to access and control the pins of a device through a shift register known as the BSR (boundary-scan register). It is through this register that a device's input and output pins can be controlled for the purpose of board (pcb) testing.

Once you have control and observability of a devices pins the user can send (and receive) test patterns that can be used for checking circuit opens and shorts. This can apply to connections between boundary-scan compliant parts AND between boundary-scan parts and active devices such as memories.

For complex tests, such as simultaneous testing of all a boards interconnects, or testing a DDR interface then it pays to deploy an automatic program generator to calculate the vector sequences and safe board states. For simpler tests e.g. to stimulate an on board DAC simple scripts that group pins together to form a 'controllable' variable.

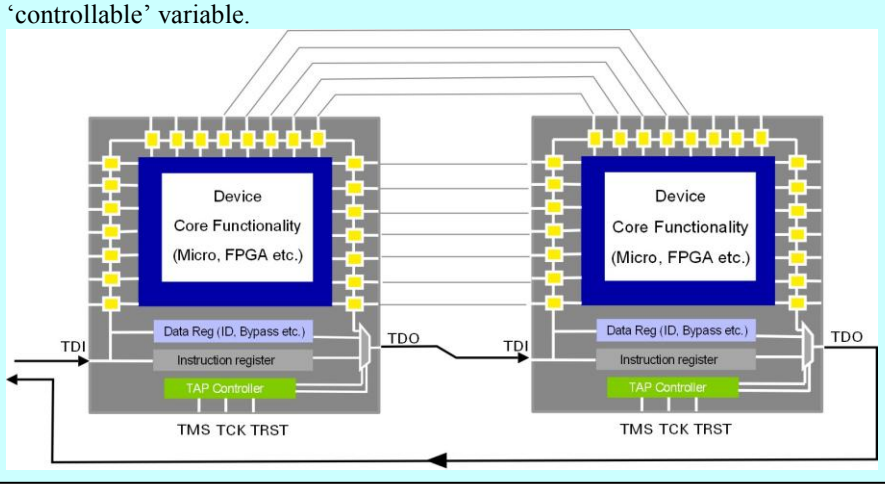

Automated Boundary-scan

JTAG Technologies is one company that has invested heavily in the development of integration options for a range of ATE and functional test platforms.

One of the most popular of these platforms is for National Instruments' LabVIEW and is known as PIP/LV (Production Integration Package for LabVIEW). Using PIP/LV functional test developers are able to harness all the automated test generation features of ProVision, a powerful processing tool that will import the UUTs (Unit Under Test) CAD-derived netlist(s) along with boundary-scan device (BSDL) model and proprietary models (supporting over 100 000 devices to date) that describe the function of non-boundary-scan parts, often referred to as clusters. The resulting test programs, once verified inside ProVision, can be released to the functional tester platform and invoked through a series of LabVIEW VIs (Virtual Instrument icons) that form PIP/LV. What's more in addition to board test code Provision can generate applications to program flash devices (NOR, NAND and serial) and can also handle the configuration of nearly all programmable logic parts (CPLDs, FPGAs, config PROMs etc..)

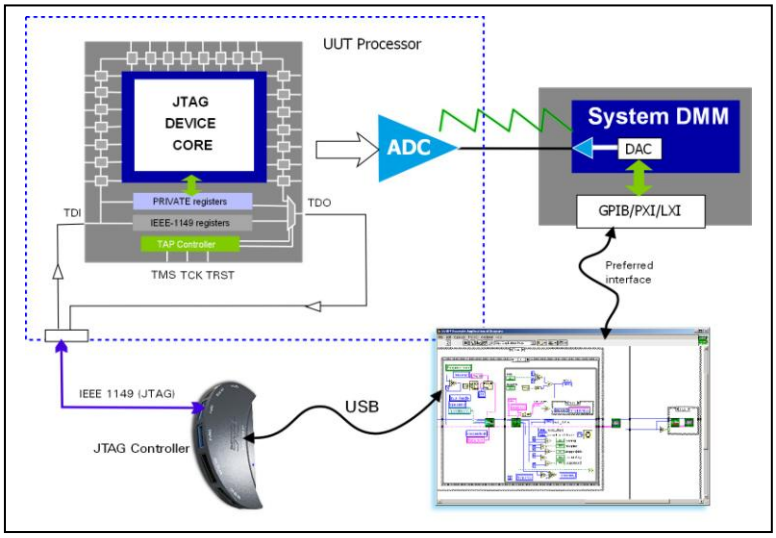

Scripted JTAG test solutions

Originally developed to run under the open-source Python scripting language, JFT (JTAG Functional Test) routines offer simple access to low-level control of a JTAG device's pins. Use JFT to set or toggle a single pin or group them together as a bus that can be set as a program variable. JFT makes it easy to create test programs with loops, conditional branching and limits testing, what's more the module approach allows test engineers to create re-usable code blocks that can be transferred between test projects. In 2013 the JFT concept was ported to a number of other platforms including National Instruments' LabVIEW and makes the perfect accompaniment to low cost functional tester platforms. By gaining access to the pins of high-density FPGA, microprocessors and DSPs test engineers are afforded access to kernel of the design in a safe and predictable manner. Figure x below shows how boundary-scan access to an FPGA can assist in testing a D-A converter device, in conjunction with a DVM – a simple task with JFT/LabVIEW and VISA driver for the DVM . The alternative functional test mechanism would involve writing specific test firmware that also requires partial functioning and boot-up of the UUT before the test can begin.

A leading developer of functional test ATE in the UK is ATE Solutions, their Flex series of ATE are frequently supplied with JTAG/boundary-scan add-ons from JTAG Technologies. Steve Lees MD says. ' Many of the designs we are asked to test cry out for boundary-scan as a low-cost method to achieve higher test coverage. We have a long-standing relationship with JTAG Technologies and have no hesitation in recommended their products and services.'

In addition to the software resources JTAG Technologies also offer high-integrity connection systems compatible with leading ATE connector vendors MAC Panel and Virginia Panel. For use with PXI(e) format boundary-scan controllers these connection systems include active signal conditioning for the JTAG test access port signals and additional IO channels.

A JT 37x7/PXI boundary-scan controller fitted with JT2147/DAK signal conditioning pod compatible with MAC Panel SCOUT

Gary Clayton of MAC Panel adds 'JTAG usage is increasing rapidly with our telecom and mil-aero customers – we have been delighted to co-operate with JTAG Technologies in providing a solution compatible with the SCOUT mass-interconnect system.'

At the Automated Test Summit, organised each year by National Instruments and supported by key co-operating suppliers, a stimulating program of events is offered to bring ATE developers and users bang up to date with the latest trends and technologies. Jeremy Twaits a Senior Marketing Engineer with NI Europe, states 'The annual ATS event is an important date in our calendar, allowing us to interact with our customers and partners, get new ideas and feed those back to the developments teams. By working with suppliers like JTAG Technologies we can expand our commercial offering to the ATE market. It's great to see that our flagship software tools, TestStand and LabVIEW, are so well supported by JTAG/boundary-scan technology.'

ATE Solutions Flex30 system typifies Functional ATE and features A JTAG Technologies PXI controller, Virginia panel fixture interface and uses NI TestStand.

Conclusions

The ATE market in Western Europe appears to have changed significantly in the past 10-15 years. Where in-circuit testers were once king, various combinations of functional, structural (via flying or static probes) and boundary-scan are used to suit a particular strategy - quite often dictated by the product/UUT itself. At the budget end of the spectrum it is possible to build a mini boundary-scan based ATE using JTAG Technologies MIOS testers that feature JTAG TAPs, digital I/O and analogue I/O all in one. Coupled with NI's LabView and the versatile LabView JFT packages you can develop a capable custom mini-ATE for about £6000. Other options available include the integration of power supplies, JTAG and

IO resources within a re-configurable cassette-based fixture. While at the top end you can consider the fully flexible series of ATE that use VPC or MAC Panel fixture interfaces and can incorporate a full range of PXI, LXI and even legacy GPIB instruments for a range of test processes including RF and microwave . Prices at this end of the market would typically start from £20 000.