BXB FxT DC/DC Converters

Adjusting the Output Voltage

Application Note 104 Rev. 01 - September 1999

1. Introduction

Introduction:
The output voltage of the BXB FxT converters can be adjusted using the TRIM pin. The output voltage trim works by changing the reference voltage inside the converters. In general, the output voltage can be increased by up to 10% or decreased to 60% of the normal output voltage. There are some exceptions so please consult the detailed data sheet for information.

2. Decreasing the Output Voltage

To decrease the output voltage, attach a resistor from the TRIM pin to the SENSE- pin as shown in Figure 1. To determine the value of the trim resistor, use the equation below.

$$R_{DECREASE} = \left(\frac{100}{\Delta\%} - 2\right) k\Omega$$

For example, suppose it was desired to reduce the output voltage of a 3.3V converter to 2.9V, the first step is to calculate the percent change of the output voltage that is desired:

$$\Delta\% = \frac{3.3V - 2.9V}{3.3V} = \frac{0.4V}{3.3V} = 12.1\%$$

Then use the equation to calculate the desired resistor value:

$$R_{DECREASE} = \left(\frac{100}{12.1} - 2\right) k\Omega = 6.26k\Omega$$

For your convenience, a graph of resistor value versus the change in output voltage is given in Figure 2 on page 2.

3. Increasing the Output Voltage

To increase the output voltage, attach a resistor from the TRIM pin to the SENSE+ pin as shown in Figure 1. To determine the value of the trim resistor, use the equation below.

$$R_{INCREASE} = \left(\frac{V_{OUT}(100 + \Delta\%)}{1.225\Delta\%} - \frac{100 + 2\Delta\%}{\Delta\%}\right) k\Omega$$

For example, suppose it is desired to increase the output of a 5V converter to 5.1V. First calculate the percentage increase:

$$\Delta\% = \frac{5.1V - 5.0V}{5.0V} = \frac{0.1V}{5.0V} = 2\%$$

Then use the equation below to calculate the required resistor value:

$$R_{INCREASE} = \left(\frac{5 \cdot (100 + 2)}{1.225 \cdot 2} - \frac{100 + 2 \cdot 2}{2}\right) k\Omega$$

$$= 156.2k\Omega$$

For your convenience, a graph of resistor value versus the change in output voltage is given in Figure 4 on page 3 for the most popular output voltages.

4. Notes

The trim resistor:
The resistor used to adjust the output voltage becomes part of the output voltage regulation circuit. This resistor should have a value tolerance of no more than ±1% and a temperature coefficient of no more than ±100.

Trimming and voltage tolerance:
Trimming the output adjusts the normal voltage of the converter by a given percentage. Trimming does not change the output to a particular value. The tolerance of the voltage after trimming will typically be the same as the tolerance on the output voltage before trimming.

For example, suppose it is desired to margin a BXB FxT DC/DC converter with a 5V output down to 4.75V to test the logic circuit. If one chooses a resistor that decreases the output voltage by 5%, the voltage when the converter is margined down could be between 4.893V and 4.608V! This is simply the normal output tolerance of the converter, ±3% (5.15V to 4.85V), decreased by 5%.

If it is desired that the voltage after margining be no less than 4.75V, the proper amount to decrease the output voltage is:

$$\Delta\% = \frac{4.75V - 4.85V}{4.75V} = -2.11\%$$

This does mean that if one has a converter operating at the higher range of the output voltage tolerance, the worst case maximum voltage after margining could be 5.042V (5.15V less 2.11%).

Caution!
If the output voltage is being adjusted to higher than the nominal value or if an OR-ing diode is being used, care must be taken to avoid activating the overvoltage protection inadvertently by increasing the voltage at the output pins beyond the minimum threshold of the overvoltage protection circuit.

5. Appendix - Output Voltage Trim Resistor Values

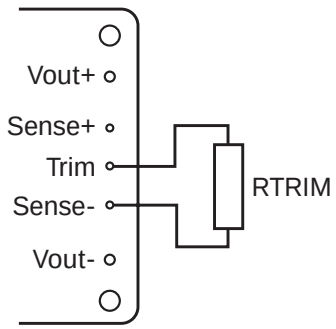

Figure 1. Decreasing the Output Voltage

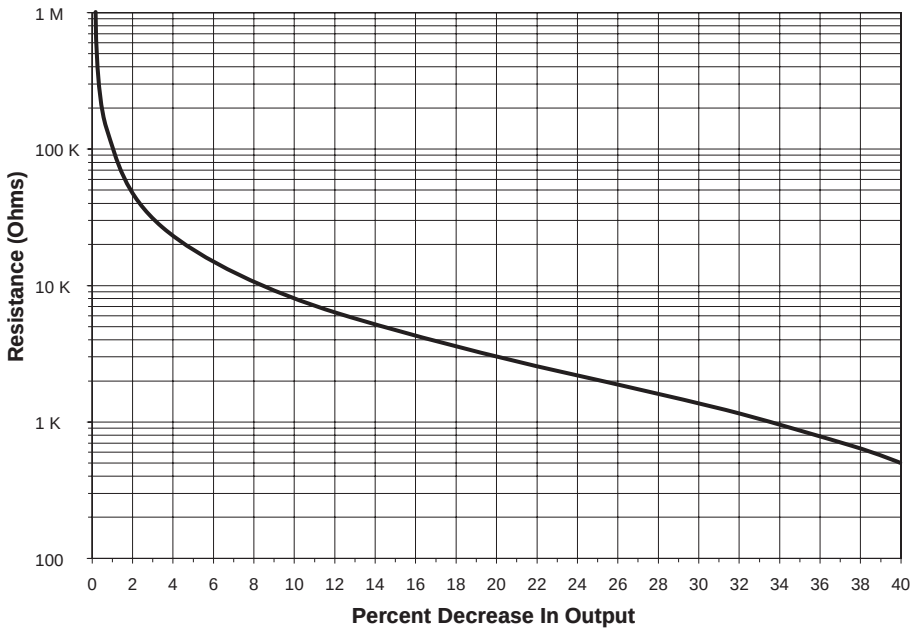

Figure 1. Resistor Values to Decrease the Output Voltage

5. Appendix - Output Voltage Trim Resistor Values Continued

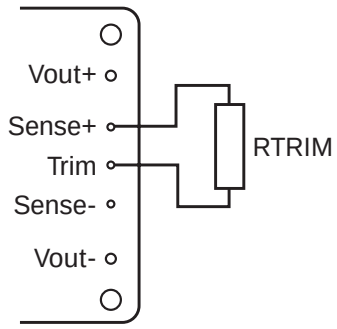

Figure 3. Increasing the Output Voltage

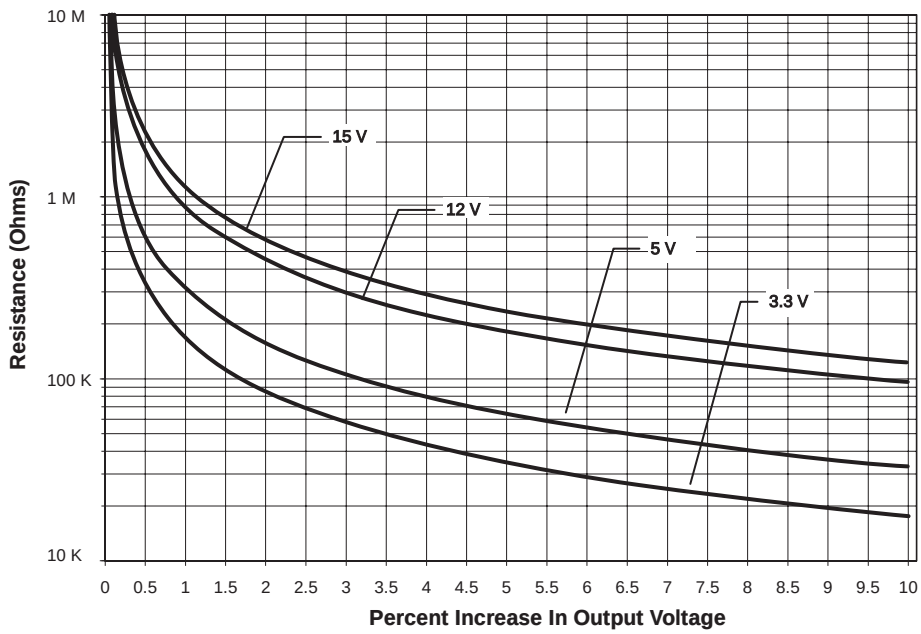

Figure 4. Resistor Values to Increase the Output Voltage