Experience Truly Immersive Audio

Spatial Audio Technology

Texas Instruments

www.ti.com/spatialaudio

National Products from Texas Instruments

all-electronics.de
ENTWICKLUNG. FERTIGUNG. AUTOMATISIERUNG

Entdecken Sie weitere interessante Artikel und News zum Thema auf all-electronics.de!

Hier klicken & informieren!

Spatial Audio Technology

Demand for Mobile Cinematic Experience

Mobile consumer devices offer impressive visuals, but the overall experience is diminished by space-constrained audio systems that lack clarity and depth. Audio applications suffer from a limited soundstage, where multiple speakers sound like a single speaker because of their close placement. Until now, designing these systems has required programming complex algorithms and DSPs.

Spatial Audio Brings Immersive Sound to Your Systems

Spatial Audio products from Texas Instruments convert the small soundstage of tablets, laptops, smartphones, and sound bars into a much wider and exciting audio experience. With a simple implementation of various spatial sound enhancements—including accurate sound beamforming and crosstalk cancellation—TI provides spatially-enhanced audio solutions for multi-speaker applications.

Comprehensive Development and Evaluation System

TI's simplified audio effect programming eliminates the need for algorithm tuning or DSP experts on your design team. Simply input the unique parameters of your design and the easy-to-program spatial processing engine outputs the spatial coefficients which can be loaded into the evaluation board GUI and tested immediately. Sound enhancement solutions can be tailored to a specific application and the simple, iterative process allows easy design updates for future systems.

How Immersive Spatial Audio Technology Works

Beamforming, Crosstalk Cancellation, and HRTF

TI's Spatial Audio technology uses a combination of beamforming, crosstalk cancellation, and head related transfer function (HRTF) algorithms to overcome the physical boundaries of space-constrained systems and deliver a truly immersive audio experience.

Spatial Audio Technology Combines

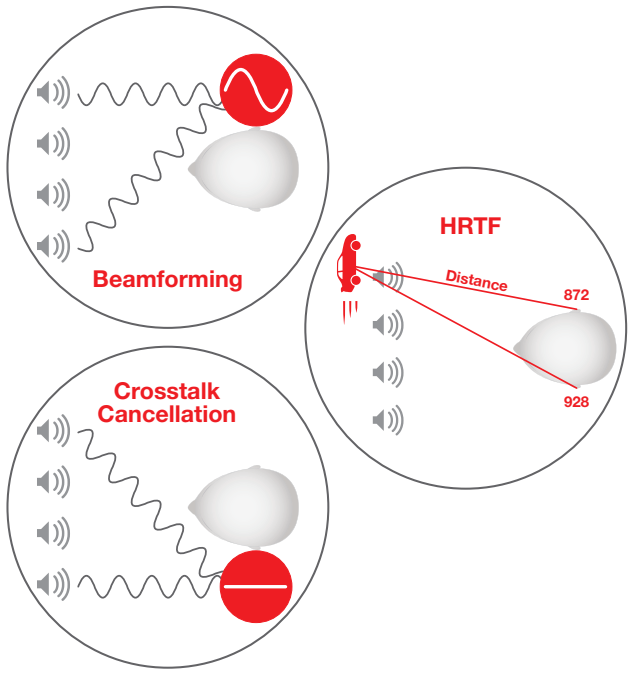

Beamforming creates areas of sound enhancement with the addition of constructively-interfering sound waves to augment other sound waves to produce a richer sound palette for the listener.

In contrast to beamforming, crosstalk cancellation uses destructive wave interference to cancel unwanted signals. Anti-waves—or cancellation waves—sent to the right ear cancel unwanted left channel audio signals. The same happens to unwanted right channel signals at the left ear. The result is distinct right- and left-channel sound enhancement areas that promote an elevated sense of audio placement in 3D space.

Sound wave processing through HRTF creates the perception that sound is coming from various directions. This psycho-acoustic effect localizes an audio source in space by considering that sound waves enter the ears at different times and with varying intensities due to the difference in distance between ears. By creating the perception of a temporal difference in each ear, HRTF places sounds in realistic 3D space.

Spatial Audio Development System

Complex Algorithm Programming Simplified

TI's web-based spatial audio software tool includes an easy-to-use speaker array coefficient generator that creates unique spatial audio coefficients in a few easy steps. Included with the evaluation board is a control graphical user interface (GUI) that configures the device, loads spatial coefficients, and provides a graphic equalizer.

The Spatial Audio development system simplifies and shortens development time.

1 Create speaker array coefficients online

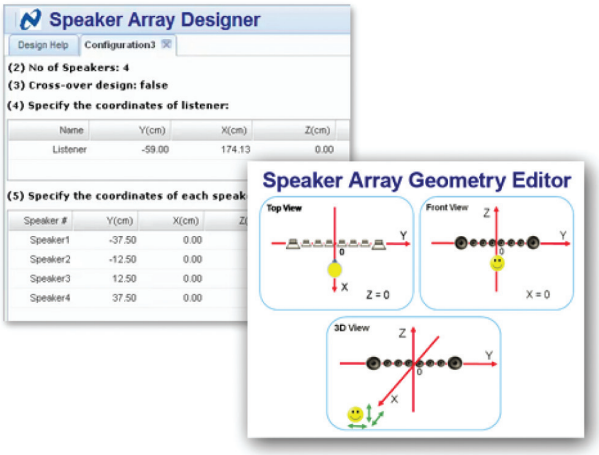

2 Download coefficients to your system or the eval board

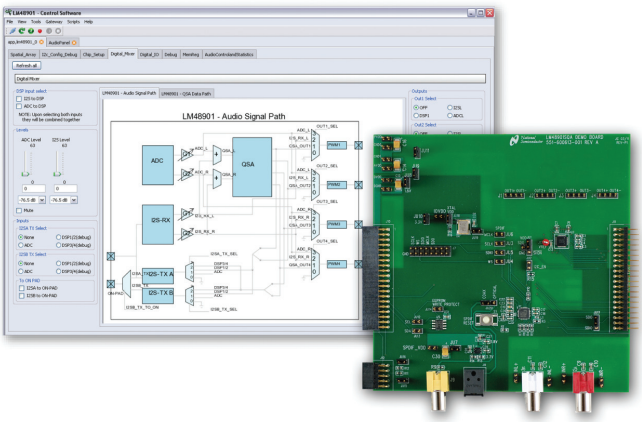

3 The GUI automatically determines settings and configures the device

Spatial Audio Products

The family of Spatial Audio products are scalable for devices the size of a credit card to those the length of a wall. Spatial Audio technology is designed for quick deployment across your entire product portfolio from tablets to sound bars.

The LM48901 directly supports four speaker channels and optionally will support two speaker channels individually plus two paralleled speaker channels to implement a 2.1 channel audio solution. Additionally, LM48901 devices can be daisy-chained to support groups of four speaker channels each, giving you simple support for multi-speaker systems.

Complete Audio Solution for High-Fidelity Systems

The LM48901 Spatial Array is a complete audio solution for space-constrained systems and includes:

- Spatial processing DSP
- Four integrated Class D amplifiers
- Analog and digital inputs
- Flexible multi-channel capability
- Simple audio effect programming

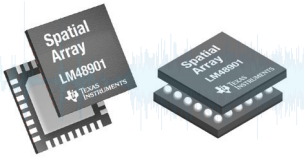

LM48901 Key Specifications

- 87 dBA SNR
- 22 mA quiescent supply current
- 5V PV_{DD}, 8Ω RL, THD+N 1% 2W output power per channel
- 0.06% THD+N
- 89% efficiency per channel
- 71 dB PSRR at 217 Hz
- 1 µA shutdown current

Features

- Spatial sound processing
- I^2S digital input
- Differential-input stereo ADC
- Advanced edge rate control reduces EMI
- Click and pop suppression
- Micro-power shutdown
- Space-saving microSMD and LLP packages

Design Resources and References

In addition to powerful, easy-to-use programming tools, TI's Spatial Audio technology is supported by online resources and references.

TI E2E™ Community

E2E Audio Forum
www.ti.com/e2eaudio

Comprehensive Evaluation System
Including hardware, software, and sample board configurations
www.ti.com/spatialaudio

Demo Videos and Tutorial
www.ti.com/spatialaudio

Product samples, datasheet, and more can be found in the LM48901 product folder
www.ti.com/product/lm48901

Visit **www.ti.com/spatialaudio** to see a demonstration of Spatial Audio technology, download the LM48901 datasheet, and order samples.

To see the entire TI Audio Solutions portfolio, visit **www.ti.com/audio**.

Important Notice: The products and services of Texas Instruments Incorporated and its subsidiaries described herein are sold subject to TI's standard terms and conditions of sale. Customers are advised to obtain the most current and complete information about TI products and services before placing orders. TI assumes no liability for applications assistance, customer's applications or product designs, software performance, or infringement of patents. The publication of information regarding any other company's products or services does not constitute TI's approval, warranty, or endorsement thereof.

The platform bar is a trademark of Texas Instruments.
All other trademarks are the property of their respective owners.

© 2011 Texas Instruments Incorporated
Printed in the U.S.A. Almaden Press,
San Jose, CA

SLYB185